Business Process Analysis & BPMN Modelling

Swinburne Guru Consulting Coaching Specialist Process

Author: Mark Le

Location: Melbourne, Australia

Project Type: Business Process Management (BPM) Portfolio

Tools: Bizagi Modeller, BPMN 2.0, Process Analysis

Project Overview

This project analyses and redesigns the end-to-end coaching operations of Swinburne Guru Consulting (SGC), focusing on improving efficiency, reducing delays, and enhancing client experience.

The work covers the full BPM lifecycle:

- As-Is process analysis and issue identification
- BPMN modelling (multi-level process diagrams)
- To-Be process redesign using best practices
- Automation opportunities (RPA and BPMS roadmap)

Business Problem

SGC's current processes contain critical inefficiencies that impact service delivery:

- Delays in coach assignment due to manual selection
- Rework loops caused by scheduling conflicts
- High communication overhead between roles
- Limited flexibility in handling specialised client requests

These issues lead to reduced client satisfaction and operational inefficiency

Key Outcomes

- Redesigned process to eliminate unnecessary rework loops
- Introduced parallel processing to reduce scheduling delays
- Improved role clarity and accountability (case ownership)
- Identified automation opportunities to reduce manual workload

Skills Demonstrated

- Business Process Analysis
- BPMN Modelling (Level 1 & Level 2)
- Process Improvement (Lean principles)
- Stakeholder-focused documentation
- Automation Strategy (RPA & BPMS)

Contents

I. Introduction 1
II. Identifying Key Problems/Issues 2
Issue 1: Inefficient Coach Selection Process 2
Issue 2: Redundant Communication and Confirmation Loops 2
Issue 3: Lack of Flexibility in Handling Special Requests 3
III. Best Practice Discussion 4
Issue 1: Inefficient Communication 4
Issue 2: Resource Allocation and Scheduling Conflicts 5
Issue 3: Lack of Flexibility in Handling Special Requests 6
IV. Conclusion 7
V. Appendix 8

I. Introduction

Business process redesign is essential for organisations seeking to enhance efficiency, competitiveness, and service quality. For Swinburne Guru Consulting (SGC), improving business processes directly impacts customer satisfaction and operational performance. Business processes define how tasks are executed to achieve organisational goals, and redesigning them can lead to improved outcomes. In service-based businesses like SGC, efficient processes are critical for delivering quality services and maintaining a positive reputation.

The purpose of this assignment is to analyse and evaluate SGC's core business processes, specifically those involved in coaching management. By identifying key process issues—such as inefficient coach selection, redundant communication loops, and inflexibility in handling special requests—the goal is to propose improvements using proven best practices. The recommendations aim to streamline operations, reduce delays, and improve both customer and staff satisfaction.

This analysis is based on the case study provided, supported by insights from similar companies and academic research on process management. Best practices from business process improvement literature will inform the solutions proposed for SGC's key issues.

The report is structured as follows:

Section II: Identifying Key Problems/Issues – This section identifies and discusses the three most critical issues affecting SGC's business processes, including inefficient coach selection, redundant communication loops, and inflexibility in handling special client requests.

Section III: Best Practice Discussion – This section proposes and evaluates best practices to address the identified issues. For each problem, two potential best practices are discussed, along with an explanation of how they solve or improve the identified issues. The advantages and disadvantages of each solution are also provided.

Section IV: Conclusion – This section summarises the findings and recommendations, highlighting the potential benefits of implementing the proposed improvements.

Section V: References.

Section VI: Appendix – This section includes additional details, process models, and summarised tables used to support the analysis and recommendations.

II. Identifying Key Problems/Issues

Issue 1: Inefficient Coach Selection Process

Problem Description:

Currently, the coaching specialist, Ahmed, manually searches for and selects a suitable coach for each client request. The process is highly dependent on Ahmed's availability and familiarity with the coaches. When the first choice of coach is unavailable, the process must loop back to find another coach, delaying the overall assignment.

Reason:

- **Time-Consuming**: The manual nature of the coach selection process takes a lot of time, especially if several coaches need to be contacted sequentially.
- **Risk of Delays**: If the initial coach is unavailable, the repeated process of contacting other coaches introduces unnecessary delays, potentially frustrating clients.
- **High Workload for Specialist**: The process heavily relies on Ahmed's availability and knowledge of coaches, leading to inefficiencies and potential burnout.

Opportunities for Improvement:

By optimizing the coach selection process, SGC could dramatically reduce delays in assigning coaches, improving client satisfaction. Streamlining this process would also reduce the workload on the coaching specialist and free up time for higher-value tasks.

Impact if Not Fixed:

If this issue is not addressed, SGC risks continuing inefficiencies, leading to client dissatisfaction, potential loss of business, and increased workload for staff. Delays in coach assignment may result in clients seeking alternative services.

Issue 2: Redundant Communication and Confirmation Loops

Problem Description:

Once a coach has been selected, Madeleine, the scheduler, must manually confirm availability with both the coach and the client. If either party cancels or requires rescheduling, the process loops back, requiring Ahmed to find another coach or Madeleine to reschedule the session. This creates redundant communication steps, often leading to delays.

Why it's a Key Problem:

- **Inefficient Use of Time**: The need for repeated confirmations adds unnecessary steps to the process, increasing time-to-schedule.

- **Communication Overhead**: The process creates excessive communication between the client, coach, and scheduler, increasing the likelihood of miscommunication or missed updates.
- **High Task Reworking**: If the client or coach cancels, the process must be restarted, further increasing inefficiencies.

Opportunities for Improvement:

Reducing the number of redundant communication steps can increase the efficiency of the process, ensuring that both clients and coaches receive accurate, timely information without the need for repeated back-and-forth. Simplifying communication would save time and effort.

Impact if Not Fixed:

If this issue is not addressed, SGC will continue to experience delays and miscommunications, leading to frustration for both clients and coaches. These communication inefficiencies could also result in missed appointments, errors in scheduling, and ultimately, loss of revenue.

Issue 3: Lack of Flexibility in Handling Special Requests

Problem Description:

When a client requests a coaching skill that is not currently available within SGC's roster of coaches, the process involves advertising for a new coach. If a suitable coach is not found within two weeks, the assignment is canceled. This rigid process leaves little room for flexibility and can result in lost business opportunities.

Why it's a Key Problem:

- **Rigid Process**: The current process does not allow for alternative solutions when a coach is unavailable, leading to cancellations.
- **Client Frustration**: Clients may be left dissatisfied if their specific coaching needs are not met, and they may seek alternative services.
- **Loss of Revenue**: The inability to accommodate special requests can result in lost opportunities for business growth, as potential clients may leave due to unfulfilled requirements.

Opportunities for Improvement:

Introducing more flexible processes for handling special client requests, such as using alternative coaches or freelance professionals, could help SGC better meet client needs and retain business. Flexibility in the process could allow SGC to offer solutions that accommodate more specialized client requests.

Impact if Not Fixed:

If this issue is not resolved, SGC risks losing clients due to its inability to meet special requests, limiting its growth potential. Clients may seek services from competitors that can provide a more flexible and accommodating approach, leading to a decline in customer retention.

III. Best Practice Discussion

Issue 1: Inefficient Communication

Best Practice 1: Contact Reduction

- **Application**: Reduce the number of communication handoffs between roles. For example, instead of the receptionist passing the client's information to different staff members for validation and confirmation, create a streamlined contact process where the coaching specialist can directly interact with both the client and coach.
- **How it Solves the Problem**: By minimising the number of handoffs, there will be fewer opportunities for miscommunication and delays. The coaching specialist will handle the communication for coach selection and scheduling, reducing unnecessary steps.
- **Advantages**: Reduces miscommunication, minimises delays, and enhances the flow of information.
- **Disadvantages**: May increase the workload for the coaching specialist, as they would be handling more tasks directly.

Best Practice 2: Synchronous/Asynchronous Communication

- **Application**: Implement asynchronous communication methods (such as email or messaging) for non-urgent tasks and synchronous methods (such as phone calls or face-to-face meetings) for urgent tasks. For example, use email for initial inquiries and confirmations, and only use phone calls for scheduling conflicts or last-minute changes.
- **How it Solves the Problem**: Asynchronous communication ensures that staff can handle tasks at their own pace, reducing the pressure of immediate responses, while synchronous communication is reserved for high-priority interactions that require real-time attention.
- **Advantages**: Increases communication efficiency, reduces the number of unnecessary calls, and ensures that urgent issues are handled promptly.
- **Disadvantages**: Miscommunication can still occur if asynchronous messages are not properly tracked, and synchronous communication can be labour-intensive.

Comparison:

- **Contact Reduction** would streamline communication and reduce the number of handoffs, which may be better suited for this process, as it directly addresses the issue of too many touchpoints.
- **Synchronous/Asynchronous Communication** would complement this by ensuring that only essential communication is done synchronously, while non-urgent communication can happen asynchronously.

Issue 2: Resource Allocation and Scheduling Conflicts

Problem:
The process of finding and scheduling coaches is inefficient, with conflicts in coach availability leading to delays and potential cancellations.

Best Practice 1: Triage

- **Application**: Introduce triage in the coach selection process by categorising clients based on the urgency of their requests and the complexity of the skills required. High-priority clients (urgent requests or special skills) should be assigned specialised resources first, while routine requests are handled by generalist coaches.
- **How it Solves the Problem**: This ensures that coaches are assigned based on the complexity of the request and their availability, reducing delays caused by conflicts in scheduling.
- **Advantages**: Prioritises urgent tasks and allocates resources efficiently, improving scheduling efficiency.
- **Disadvantages**: Could lead to overburdening specialised resources and may require more sophisticated resource tracking.

Best Practice 2: Case Assignment

- **Application**: Implement a case assignment approach, where the same actor (e.g., the coaching specialist) handles a specific client's assignment from start to finish. This reduces the back-and-forth between multiple actors, allowing one person to oversee the entire scheduling process and coach assignment.
- **How it Solves the Problem**: By assigning a single actor to handle each client case, scheduling conflicts are reduced, as the person responsible has full control over the process.
- **Advantages**: Reduces miscommunication, ensures consistency in handling each client's case, and eliminates unnecessary handovers.
- **Disadvantages**: May increase the workload for specific actors if not balanced properly.

Comparison:

- **Triage** would be effective in ensuring that urgent or complex tasks are prioritized, while **Case Assignment** would streamline the process by assigning one person to manage the entire case. Depending on the business's priorities, case assignment may be a better fit for smaller teams, while triage would work well for managing high volumes of clients.

Issue 3: Lack of Flexibility in Handling Special Requests

Best Practice 1: Activity Composition

- **Application**: Combine the process of searching for coaches with scheduling by integrating them into one task. When advertising for a new coach, simultaneously schedule tentative dates for interviews and coaching sessions. This will reduce the time gap between finding a coach and confirming availability.
- **How it Solves the Problem**: This integration shortens the process of both finding and scheduling a coach, allowing SGC to meet client requests for niche skills more quickly.
- **Advantages**: Reduces delays in onboarding new coaches and meeting client needs more efficiently.
- **Disadvantages**: May be challenging to predict scheduling before confirming a coach's availability.

Best Practice 2: Flexible Assignment

- **Application**: Create a flexible assignment pool that includes freelance or on-demand coaches. Instead of advertising for a new coach whenever there is a special skill request, maintain a pool of coaches with diverse skills who can be assigned as needed.
- **How it Solves the Problem**: This approach ensures that SGC can respond quickly to special skill requests by having a pre-established pool of coaches ready to take on assignments.
- **Advantages**: Increases flexibility, improves response times for special requests, and reduces assignment cancellations.
- **Disadvantages**: Managing a pool of freelance coaches requires additional administrative oversight and may increase costs.

Comparison:

- **Activity Composition** would streamline and combine tasks, reducing delays but might not always be practical due to unpredictable coach availability. **Flexible Assignment** is likely the more suitable practice for SGC, as it provides flexibility in handling special requests and ensures a quicker response to client needs.

IV. Conclusion

The analysis of Swinburne Guru Consulting’s core business processes reveals several inefficiencies that reduce client satisfaction. The key issues identified, including the inefficient coach selection process, redundant communication loops, and inflexibility in handling special client requests, all contribute to delays, miscommunication, and lost business opportunities. If left unresolved, these problems could damage SGC's reputation and lead to reduced client retention.

By applying best practices such as Contact Reduction, Case Assignment, and Flexible Assignment, SGC can streamline its operations, reduce delays, and improve overall service delivery. These practices address the core issues by simplifying communication, improving resource allocation, and introducing greater flexibility in managing client requests. Additionally, these improvements would not only enhance client satisfaction but also optimize internal workflows, allowing staff to focus on higher-value tasks.

V. Appendix

Appendix A. Swinburne Guru Consulting Coaching Processes – Main Process

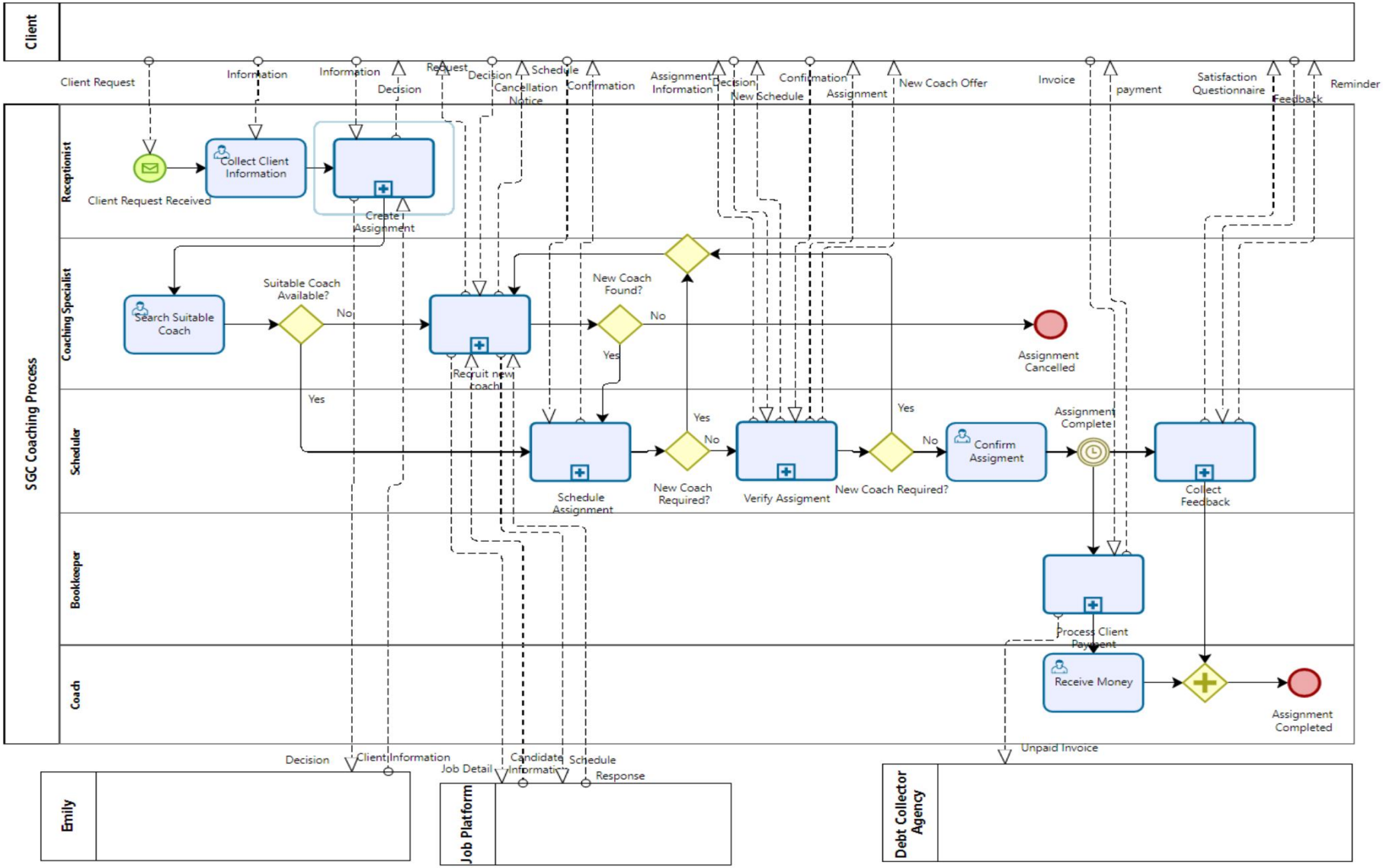

Appendix B. Swinburne Guru Consulting Coaching Processes – Main Process (No Message Flows)

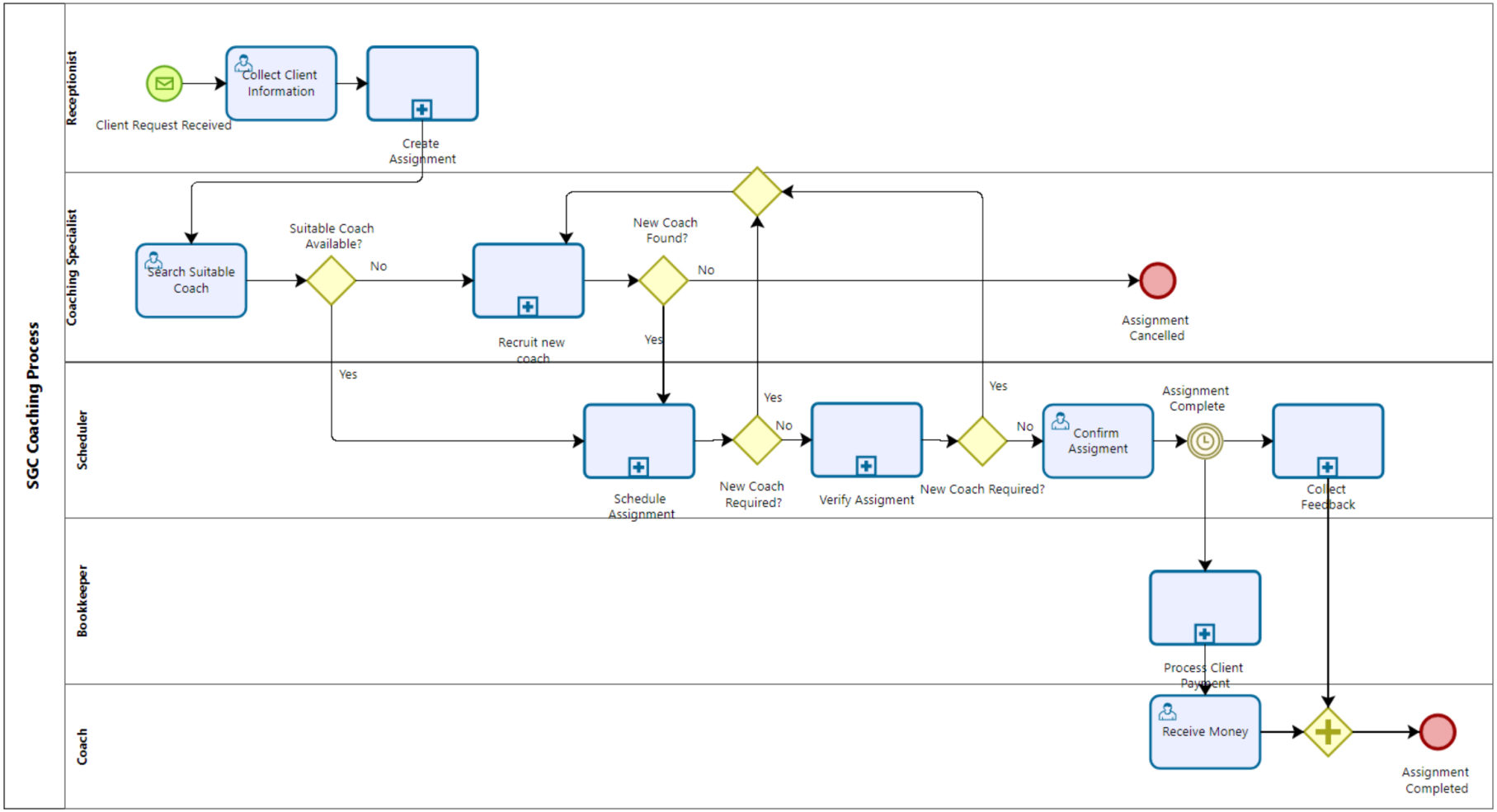

Tasks & Gateways Names	Brief Explanation
Start Event: Client Request Received	The process begins when the client sends a request to the receptionist for a coaching assignment.
Collect Client Information	The **Receptionist** gathers all the necessary information from the client to proceed with creating the assignment.
Create Assignment	The receptionist creates the assignment in the system based on the collected client information.
Search Suitable Coach	The coaching specialist searches for a coach with the appropriate skills for the assignment.
Decision Gateway (Suitable Coach Available?)	If a suitable coach is found, proceed with scheduling the assignment; if not, recruit a new coach.
Recruit New Coach	If a suitable coach is not available, the coaching specialist posts a job advertisement and seeks to find a new coach for the assignment.
Decision Gateway (New Coach Found?)	If yes, go to Schedule Assignment, if no Cancel Assignment
Schedule Assignment	Once a coach is found (either existing or new), the assignment is scheduled with the coach.
Decision Gateway (New Coach Required?)	If the Coach's schedule is unavailable, proceed to Recruit New Coach, if yes, go to Verify Assignment.
Verify Assignment	The scheduler verifies that both the coach and the client are satisfied with the scheduled assignment.
Decision Gateway (New Coach Required?)	If the current coach is not available, the scheduler will decide whether to request a new coach or reschedule with the same coach. If no go to Confirm Assignment.
Confirm Assignment	Once everything is confirmed, the assignment is finalized.
Collect Feedback	After the assignment is completed, the client relations officer collects feedback from both the client and the coach.
Process Client Payment	The bookkeeper processes the client's payment after the assignment is confirmed.
Receive Money	The coach receives the payment after the bookkeeper processes it.
End Event: Assignment Completed	The final step in the process, marking the successful completion of the assignment and any associated tasks such as feedback collection and payment.

Appendix C. Swinburne Guru Consulting Coaching Processes – Subprocess: Create Assignment

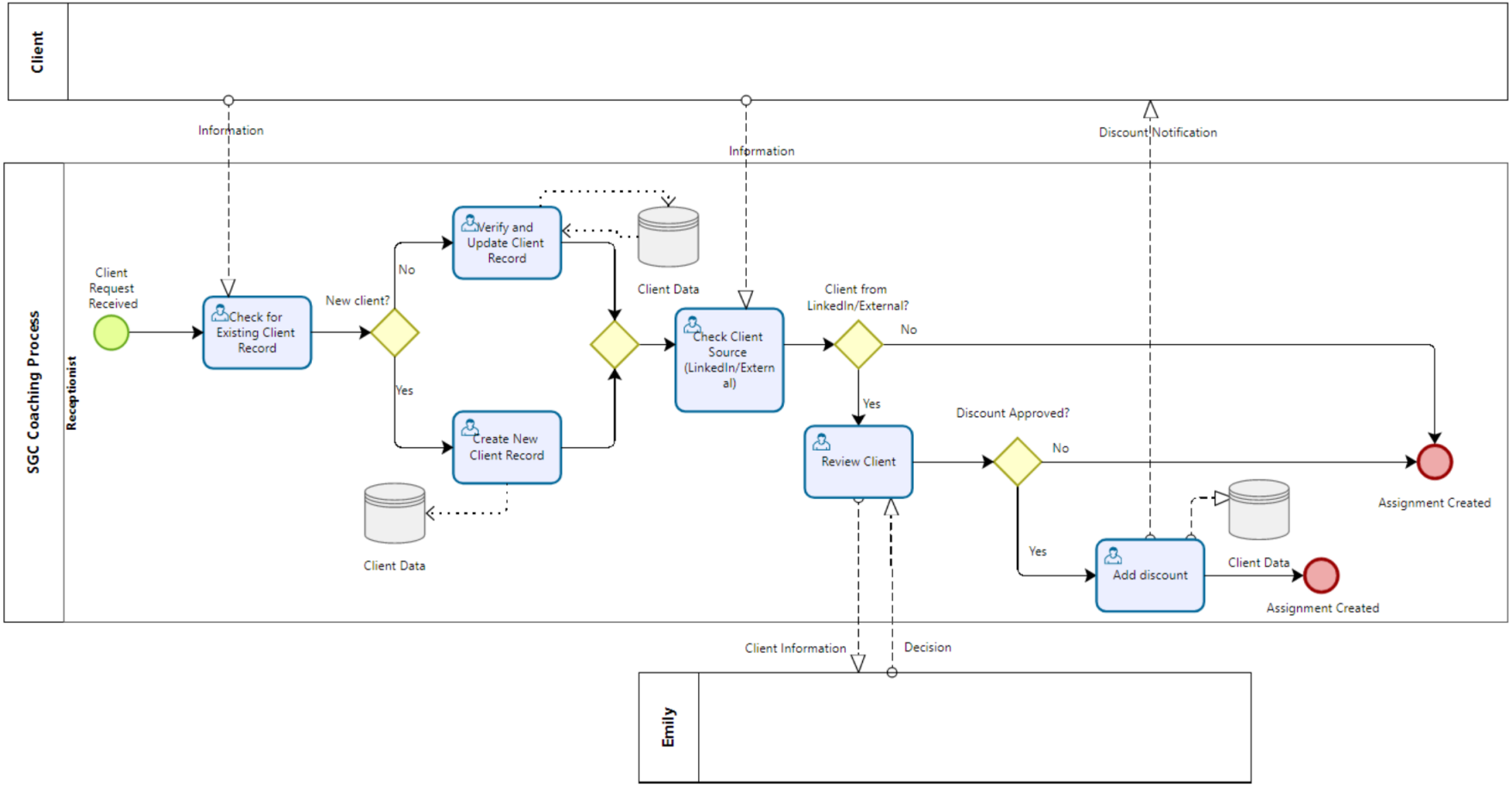

Tasks & Gateways Names	Brief Explanation
Start Event: Client Request Received	The process begins when the client sends a request to the receptionist for a coaching assignment.
Check for Existing Client Record	The receptionist checks if there is already a record for the client in the system. If a record exists, it proceeds to verify and update; otherwise, a new record is created.
Decision Gateway (New Client?)	If the client is new, a new record is created; if not, the existing record is updated.
Verify and Update Client Record	If the client is not new, the existing client data is reviewed and updated with any new or missing information.
Create New Client Record	If the client is new, a new client record is created in the database, storing all necessary information.
Check Client from LinkedIn/External?	Checks if the client source is from LinkedIn or another external source.
Client from LinkedIn/External?	If ‘yes’, the process moves to ‘Review Client’. If ‘no’, go to ‘Assignment Create’
Review Client	The client’s details are reviewed by Emily to determine if they are eligible for a discount.
Discount Approved?	If a discount is approved, proceed to "Add Discount"; if not, create the assignment without a discount.
Add Discount	If a discount is approved, the receptionist adds the discount to the client’s account or assignment.
End Event: Assignment Created	The process concludes with the creation of the client’s assignment, marking the successful completion of the workflow.

Appendix D. Swinburne Guru Consulting Coaching Processes – Subprocess: Recruit New Coach

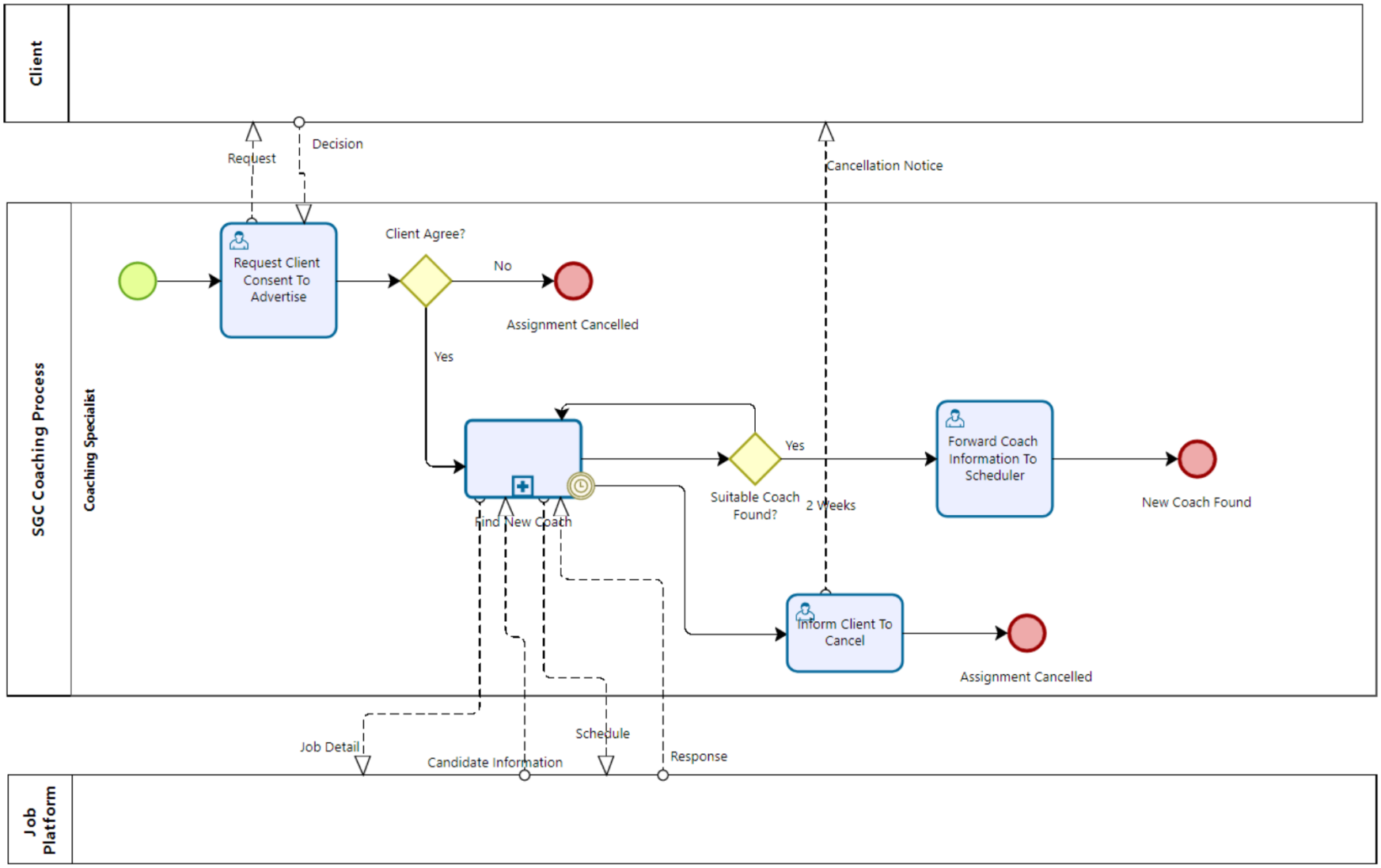

Tasks & Gateways Names	Brief Explanation
Request Client Consent to Advertise	The **Coaching Specialist** requests the client's consent to advertise for a new coach for the assignment.
Decision Gateway (Client Agree?)	If the client agrees to advertise, proceed to 'Find New Coach'; if not, cancel the assignment.
Find New Coach	The **Coaching Specialist** posts the job advertisement to find a new coach on a job platform and waits for candidate applications.
2 Weeks (Boundary Timer)	Represents a 2-week period for receiving applications and finding a suitable coach. If a suitable coach is not found within the 2-week period, inform the client and cancel the assignment.
Suitable Coach Found?	If a suitable coach is found, proceed to forward the coach information to the scheduler; if not, return to Find New Coach.
Forward Coach Information to Scheduler	The **Coaching Specialist** forwards the details of the suitable coach to the scheduler for further processing and scheduling.
Inform Client to Cancel	If no suitable coach is found, the **Coaching Specialist** informs the client that the assignment will be cancelled.
End Event: Assignment Cancelled	The assignment is cancelled either due to the client's refusal or the failure to find a suitable coach.
End Event: New Coach Found	The process concludes with the identification of a new coach, and the coach's details are forwarded to the scheduler for assignment.

Appendix E. Swinburne Guru Consulting Coaching Processes – Subprocess: Find New Coach

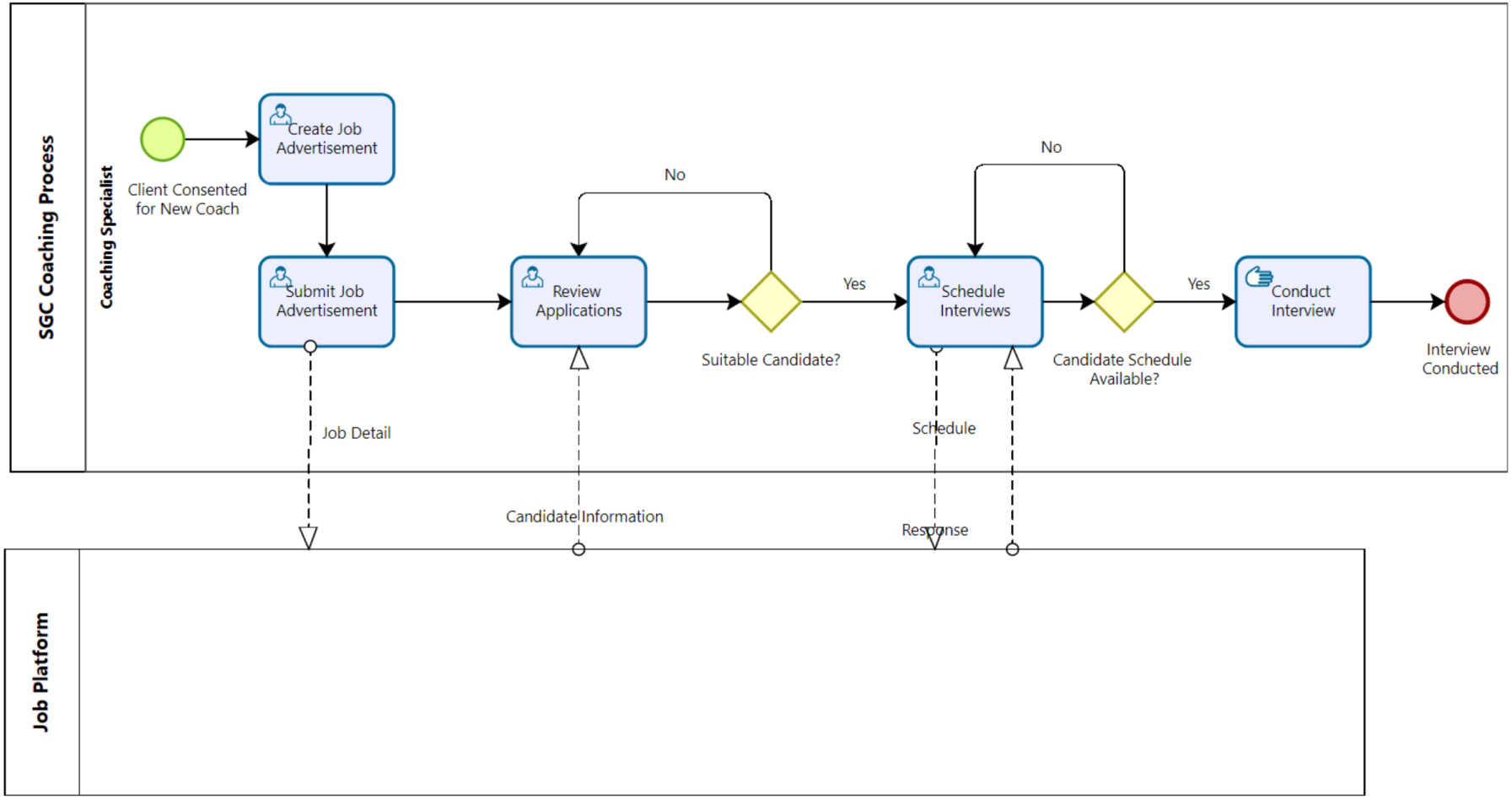

Tasks & Gateways Names	**Brief Explanation**
Start Event: Client Consented for New Coach	The process begins when the client accept to find the new coach.
Create Job Advertisement	The **Coaching Specialist** creates a job advertisement to find a suitable coach for the assignment.
Submit Job Advertisement	The **Coaching Specialist** submits the job advertisement to a **Job Platform** with the necessary job details.
Review Applications	The **Coaching Specialist** reviews the applications received from the **Job Platform**. The candidate information is evaluated for suitability.
Decision Gateway: Suitable Candidate?	Decision gateway to check if the candidate is suitable. If 'Yes', proceed to 'Schedule Interview'; if 'No', come back to 'Review Applications'.
Schedule Interviews	The **Coaching Specialist** schedules interviews for candidates that pass the initial review. **Job Platform** communicates the schedule details.
Decision Gateway: Candidate Schedule Available?	Decision gateway to check if the candidate's schedule is available for the interview. If 'Yes', proceed to 'Conduct Interview'; if 'No', re-schedule.
End Event: Conduct Interview	The **Coaching Specialist** conducts the interview with the candidate to assess their suitability for the coaching assignment.

Appendix F. Swinburne Guru Consulting Coaching Processes – Subprocess: Schedule Assignment

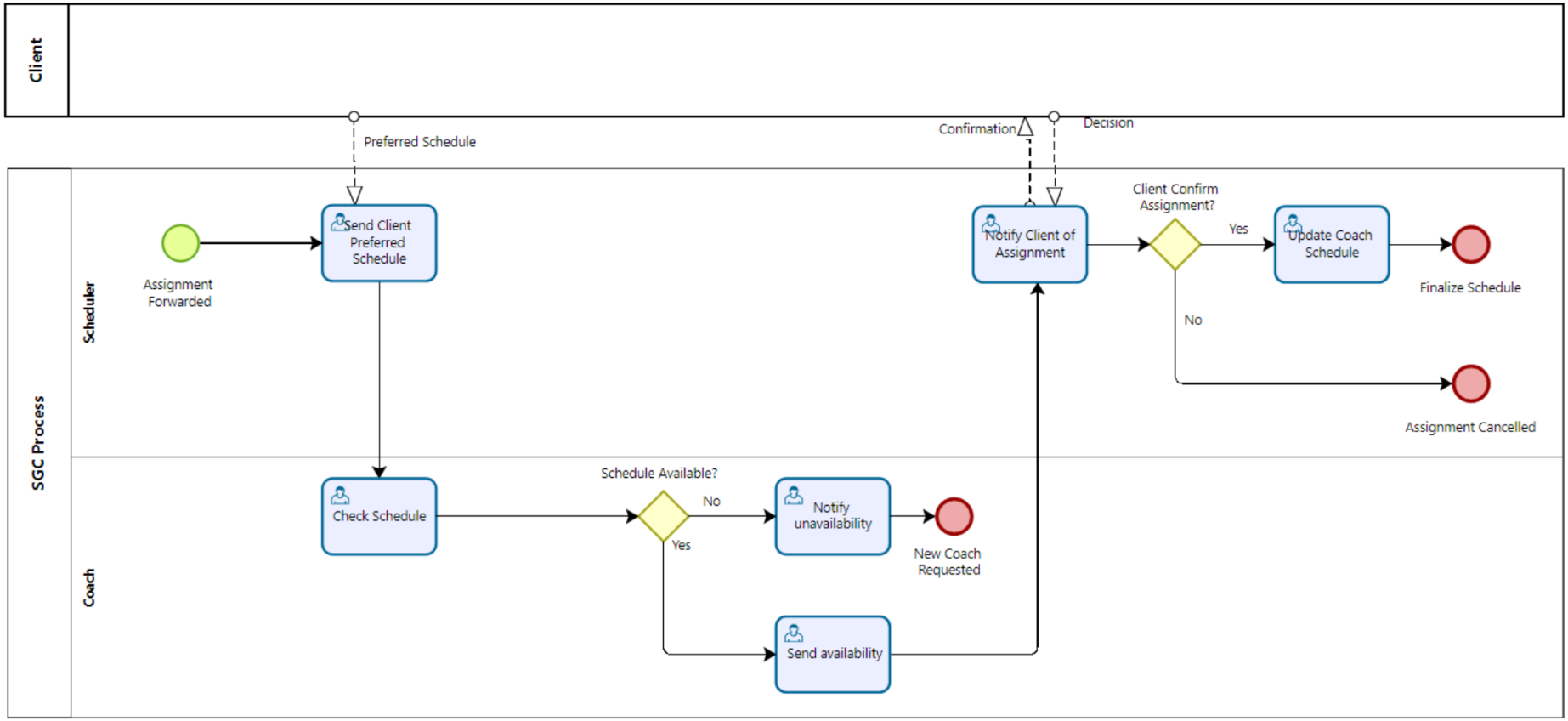

Tasks & Gateways Names	**Brief Explanation**
Start Event: Assignment Forward	The process begins when the Coaching Specialist forwards the assignment to schedule
Send Client Preferred Schedule	The **Scheduler** sends the preferred schedule of the client to the **Coach** for checking availability.
Check Schedule	The **Coach** checks their availability based on the preferred schedule provided by the **Scheduler**.
Decision Gateway (Schedule Available?)	A decision gateway to check if the coach's schedule is available. If 'Yes', send the availability; if 'No', notify the **Scheduler** of unavailability.
Notify Unavailability	If the **Coach** is not available, the **Coach** notifies the **Scheduler** that they are unavailable for the client's preferred schedule. Then **Scheduler** will 'Request New Coach'
Send Availability	If the **Coach** is available, the **Coach** sends the availability details to the **Scheduler** for further scheduling.
Notify Client of Assignment	The **Scheduler** notifies the **Client** of the confirmed assignment details, including time and schedule.
Decision Gateway (Client Confirm Assignment?)	The **Client** decides whether to confirm the assignment based on the schedule. If 'Yes', proceed to update the coach's schedule; if 'No', cancel the assignment.
Update Coach Schedule	The **Scheduler** updates the **Coach's** schedule to reflect the confirmed assignment from the client.
End Event: Finalize Schedule	The process ends successfully with the schedule being finalized and the assignment confirmed.
End Event: Assignment Cancelled	If the client does not confirm the assignment, the process ends with the assignment being cancelled.
End Event: New Coach Requested	If the coach is unavailable, a new coach is requested for the assignment.

Appendix G. Swinburne Guru Consulting Coaching Processes – Subprocess: Verify Assignment

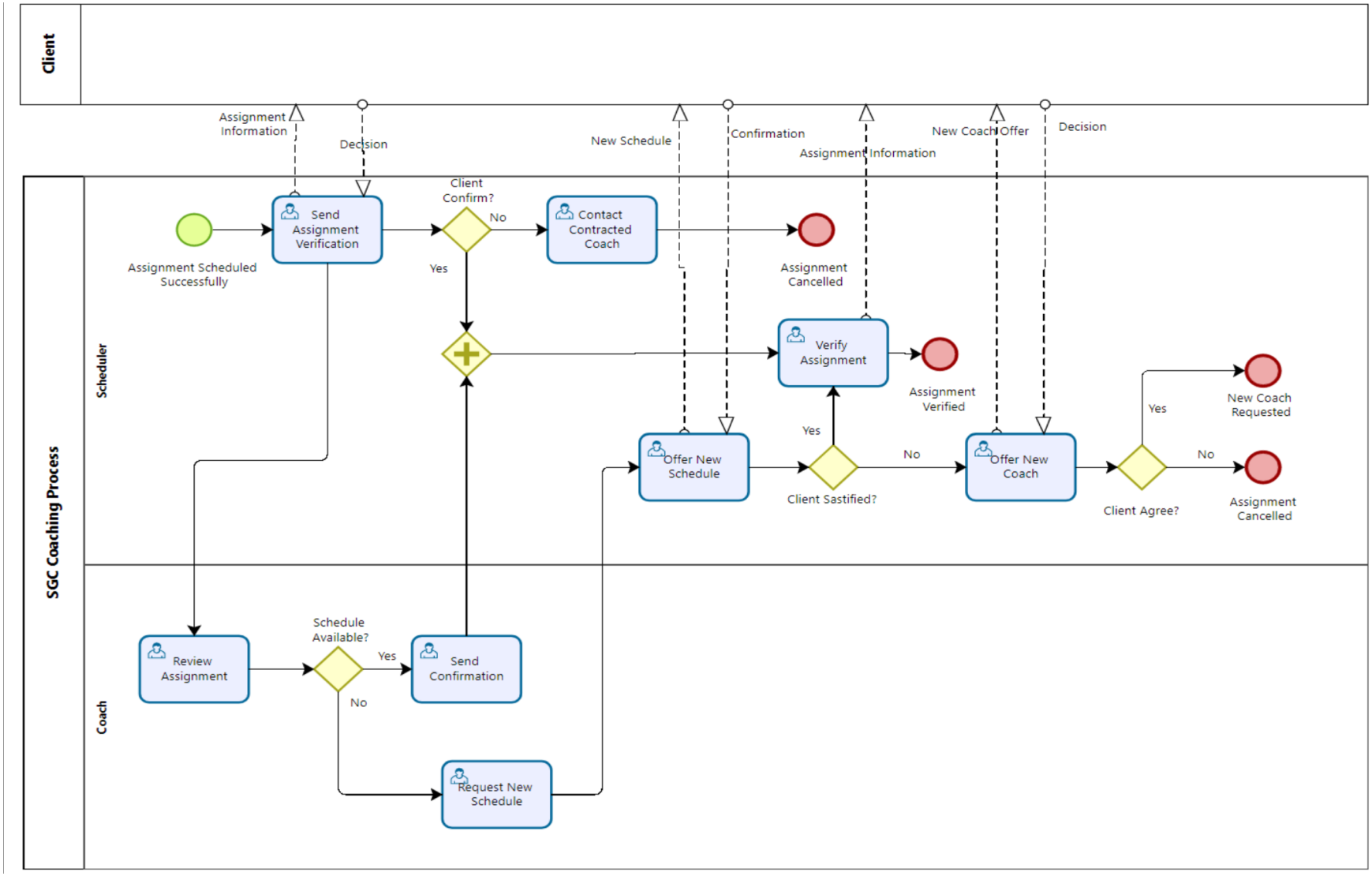

Tasks & Gateways Names	Brief Explanation
Assignment Scheduled Successfully	The process begins when Assignment is scheduled
Send Assignment Verification	The **Scheduler** sends a message to the **Client** to verify the assignment details, confirming the schedule and other details.
Decision Gateway (Client Confirm?)	A decision gateway where the **Client** decides whether to confirm the assignment. If 'Yes', proceed to Verify Assignment; if 'No', cancel the assignment.
Parallel Gateway	Make sure Client And Coach confirm then proceed to Verify Assignment.
Contact Contracted Coach	The **Scheduler** contacts the contracted **Coach** to announce that Client cancelled.
Assignment Cancelled (End Event)	If the **Client** does not confirm the assignment, the process ends with the cancellation of the assignment.
Review Assignment	The **Coach** reviews the details of the assigned coaching session.
Decision Gateway (Schedule Available?)	The **Coach** checks their availability for the scheduled assignment. If 'Yes', send confirmation; if 'No', request a new schedule.
Send Confirmation	The **Coach** sends confirmation to the **Scheduler** that they are available for the scheduled assignment.
Request New Schedule	If the **Coach** is unavailable, they request a new schedule for the assignment from the **Scheduler**.
Offer New Schedule	If the client is not satisfied, the **Scheduler** offers a new schedule or adjustment for the assignment.
Decision Gateway (Client Satisfied?)	A decision gateway where the **Scheduler** checks if the **Client** is satisfied with the current arrangement. If 'Yes', verify assignment; if 'No', offer a new coach.
Verify Assignment	The **Scheduler** verifies the assignment after receiving confirmation from the **Client** and **Coach**.
Offer New Coach	If the client is not satisfied with the coach or the schedule, the **Scheduler** offers the option of a new coach for the assignment.
Decision Gateway (Client Agree?)	A decision gateway where the **Client** decides whether to agree to the new coach offer. If 'Yes', a new coach is requested; if 'No', the assignment is cancelled.
End Event: New Coach Requested	If the coach is unavailable, a new coach is requested for the assignment.

End Event: Assignment Verified	The process ends successfully with the confirmation of coach and client.
End Event: Assignment Cancelled	If the client does not agree to find a new coach, the process ends with the assignment being canceled.

Appendix H. Swinburne Guru Consulting Coaching Processes – Subprocess: Collect Feedback

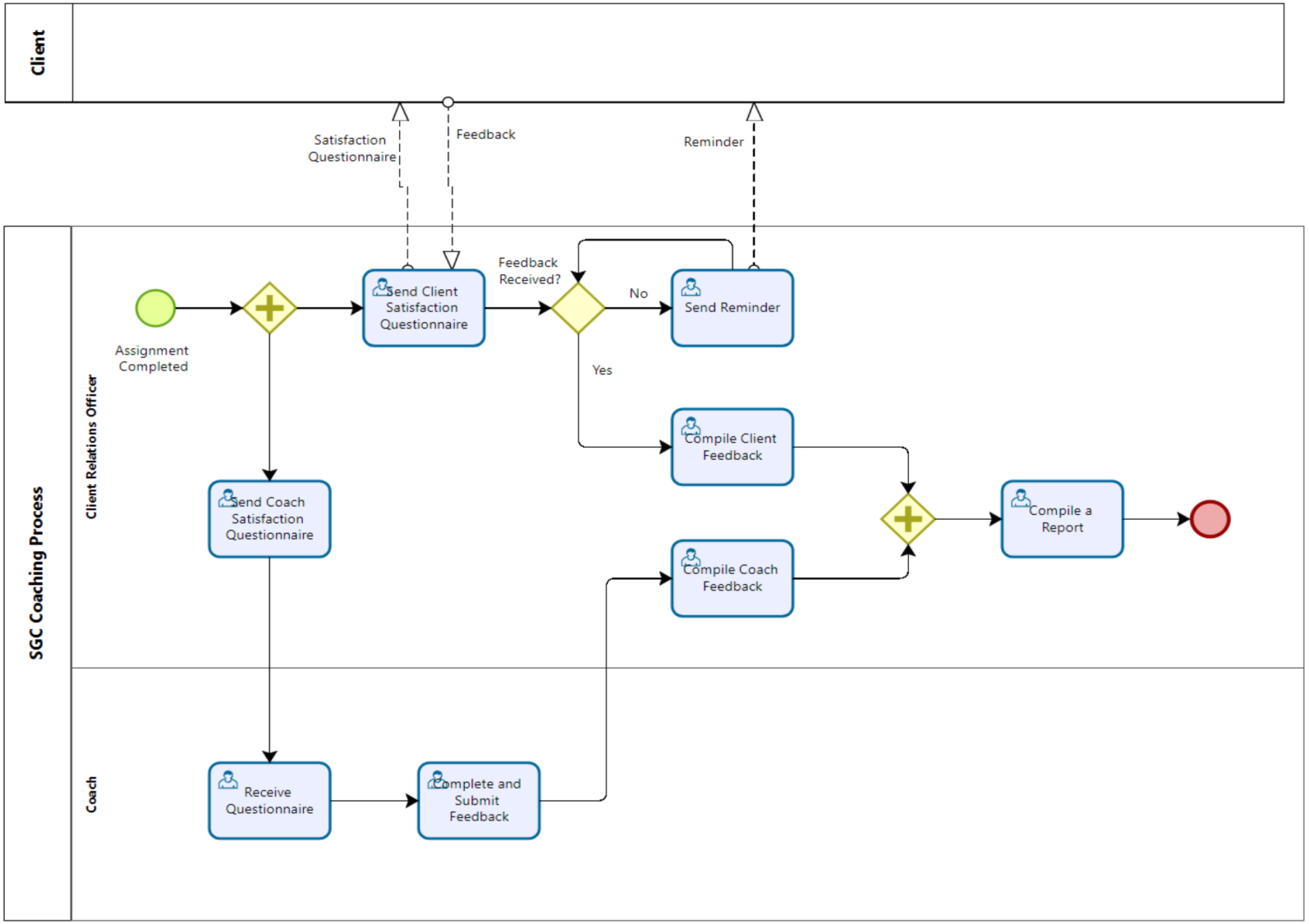

Tasks & Gateways Names	Brief Explanation
Start Event: Assignment Complete	The process begins when Assignment is completed.
Send Client Satisfaction Questionnaire	The **Client Relations Officer** sends a satisfaction questionnaire to the **Client** after the assignment is completed to gather feedback on the session.
Send Coach Satisfaction Questionnaire	The **Client Relations Officer** sends a satisfaction questionnaire to the **Coach** to gather feedback on the assignment.
Receive Questionnaire	The **Coach** receives the satisfaction questionnaire and proceeds to complete it.
Complete and Submit Feedback	The **Coach** completes the satisfaction questionnaire and submits their feedback to the **Client Relations Officer**.
Decision Gateway (Feedback Received?)	A decision gateway that checks if feedback has been received from the **Client**. If 'No', a reminder is sent; if 'Yes', proceed to compiling the feedback.
Send Reminder	If feedback has not been received, the **Client Relations Officer** sends a reminder to the **Client** to submit the satisfaction questionnaire.
Compile Client Feedback	Once feedback is received from the **Client**, the **Client Relations Officer** compiles the **Client's** feedback into a report.
Compile Coach Feedback	Once the feedback from the **Coach** is received and processed, the **Client Relations Officer** compiles the feedback into the report.
Compile a Report	The **Client Relations Officer** compiles the feedback from both the **Client** and the **Coach** into a final report for analysis.

Appendix I. Swinburne Guru Consulting Coaching Processes – Subprocess: Proceed Client Payment

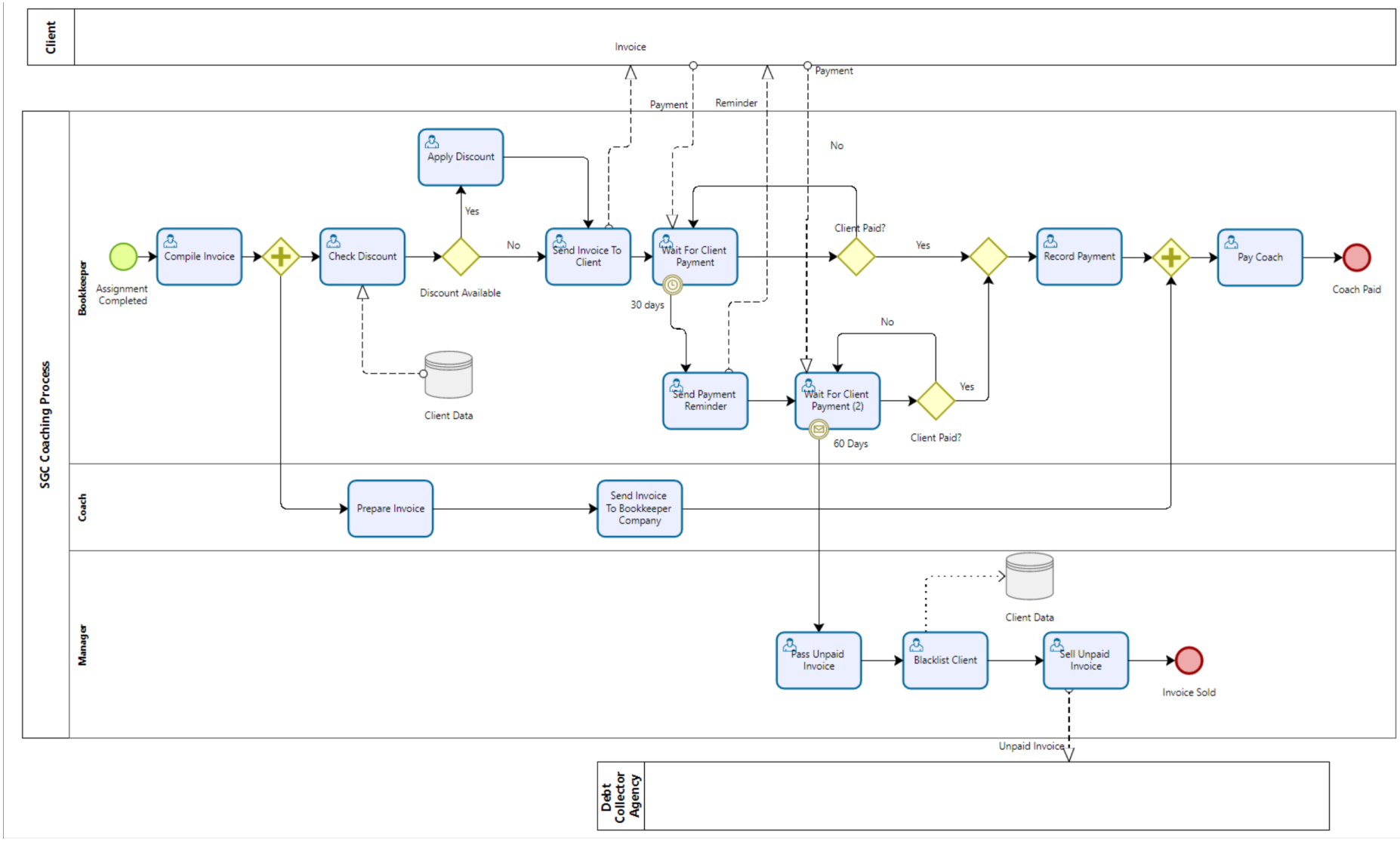

Tasks & Gateways Names	Brief Explanation
Start Event: Assignment Complete	The process begins when Assignment is completed.
Compile Invoice	The **Bookkeeper** compiles the invoice for the completed coaching assignment.
Check Discount	Checks if the client is eligible for a discount.
Decision Gateway (Discount Available?)	If 'Yes' go to 'Apply Discount', if 'No' go to 'Send Invoice to Client'.
Apply Discount	If the client is eligible for a discount, the bookkeeper applies the discount to the invoice.
Send Invoice to Client	The **Bookkeeper** sends the invoice to the **Client** for payment.
Wait for Client Payment (30 days)	Wait for Client to pay the invoice. After 30-day, proceed to 'Send Payment Reminder'
Decision Gateway (Client Paid?)	If 'yes', go to 'Record Payment'; if 'no' go back to 'Wait for Client Payment'
Send Payment Reminder	If the client has not paid, the **Bookkeeper** sends a reminder after 30 days.
Wait for Client Payment (2) (60 days)	Wait for Client to pay the invoice. After 60-day, proceed to 'Pass Unpaid Invoice'
Record Payment	If the **Client** pays within the 90 days, the payment is recorded by the **Bookkeeper**.
Pay Coach	Once the **Client's** payment is recorded, the **Coach** is paid by the company.
Prepare Invoice	The **Coach** prepares their invoice
Send Invoice To Bookkeeper Company	The **Coach** sends the invoice to the company for their payment.
Pass Unpaid Invoice	If the **Client** has not paid after 90 days, the **Bookkeeper** passes the unpaid invoice to the **Manager**.
Blacklist Client	The **Manager** blacklists the client due to non-payment of the invoice after 90 days.
Sell Unpaid Invoice	The unpaid invoice is sold to a debt collection agency after the client is blacklisted.
End Event: Invoice Sold	The process ends when unpaid invoice is sold to a debt collection agency
End Event: Coach Paid	The process ends when the coach is paid

Appendix K.

Issue	b. Best Practice(s)	c. Application Description and/or Solution Explanation	d. Advantages	e. Disadvantages
Excessive time spent on input validation	1. **Control Relocation** 2. **Case Assignment**	Move input validation to the customer by having clients verify their information before submission. Assign a dedicated actor to oversee the process end-to-end.	Reduces processing time and ensures accuracy from the start. Simplifies the workflow by reducing handovers.	Puts the onus on the customer to validate information, which could reduce convenience and lead to incomplete submissions.
Delays in coach scheduling due to communication bottlenecks	1. **Synchronous/Asynchronous Communication** 2. **Activity Automation**	Shift from manual email or phone calls to automated SMS reminders or online scheduling tools. Automate availability checks for coaches.	Reduces delays caused by manual communication and provides clients with faster scheduling options.	May require investment in communication tools and automation systems, and clients may struggle with automated systems.
Manual and redundant steps in client onboarding	1. **Activity Elimination** 2. **Integration**	Eliminate redundant manual data re-entry and integrate the client onboarding process with automated validation and background checks using external systems.	Speeds up the onboarding process by reducing human intervention and streamlining integration with external systems (e.g., LinkedIn, referrals).	Initial setup of automated integrations can be expensive and complex, with ongoing maintenance required to ensure smooth operation.
Frequent back-and-forth between coach and specialist in assignment verification	1. **Contact Reduction** 2. **Parallelism**	Reduce unnecessary communication between coach and specialist by consolidating steps and verifying availability in parallel during the scheduling phase.	Minimizes communication delays and parallelizes tasks, reducing total process time.	May reduce personal touch in client-coach interactions and require significant process restructuring to enable parallelism.
Unclear distinction of responsibilities in payment handling	1. **Split Responsibilities** 2. **Buffering**	Clearly divide responsibilities between bookkeeper and manager for payment and debt collection, and use a subscription-based	Clear responsibilities avoid confusion, while buffering allows quick access to information about unpaid invoices,	Requires process reengineering and clear definition of roles, which may be resisted by staff accustomed to the old process.

		notification for unpaid invoices.	streamlining payment processes.	
Inconsistent application of discounts for special clients	1. **Decision Tables** 2. **Control Addition**	Apply a decision table to automatically determine if a client is eligible for a discount, and add a control step to verify the decision before finalizing the invoice.	Ensures consistent application of discounts, reduces human errors, and improves client satisfaction.	Requires ongoing maintenance of decision tables and a verification process to ensure fairness in discount application.
Coach payment delays due to manual tracking of client payments	1. **Batch-Based Work** 2. **Activity Automation**	Group client payments and automate coach payments once client payment is confirmed within a batch, reducing reliance on manual payment follow-ups.	Ensures timely payments for coaches and reduces administrative effort.	May delay coach payment slightly, as payments will be processed in batches rather than immediately upon client payment.
Too many touchpoints in handling client requests	1. **Numerical Involvement** 2. **Case Handling**	Minimize the number of employees involved in handling client requests by centralizing the process and having one actor responsible for the client from end-to-end.	Reduces delays caused by handovers and improves process transparency and accountability.	May lead to overburdening a single employee, requiring careful workload balancing and process management.
Frequent exceptions in coach assignment due to scheduling conflicts	1. **Exception Handling** 2. **Knockout**	Isolate exceptional cases (e.g., scheduling conflicts) from regular coach assignments and introduce a knockout step to check availability early in the process.	Reduces disruption to the regular process flow and ensures issues are handled efficiently without affecting standard cases.	Requires process redesign to handle exceptions separately and early identification of potential failures to avoid later disruption.
Clients failing to submit feedback on time	1. **Synchronous/Asynchronous Communication** 2. **Control Addition**	Automate feedback requests using email/SMS with scheduled reminders, and add control activities to check completeness of feedback before processing.	Ensures timely feedback collection and improves overall process efficiency by reducing manual follow-ups.	Automating reminders may overwhelm clients, and adding control steps might increase the complexity of the process.